

• Installation and wiring of luminaire must be in accordance with all applicable local codes.
• Installation, inspection, and maintenance of luminaires should be performed by a qualified electrician.
• DO NOT make or alter any open holes in the luminaire. Do not modify the luminaire.
• DO NOT install damaged product.
• Make sure electrical power is OFF before and during installation and maintenance.
• Make sure the equipment is properly grounded.
• Make sure the supply voltage is same as the rated fixture voltage.

1

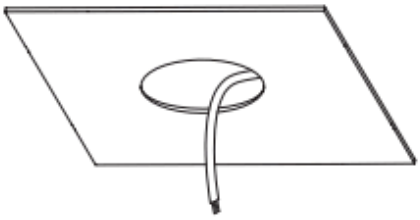

Made cut hole in ceiling accordingly to it's size and make wiring from the power outlet.

2

Connect the AC wire from driver to power outlet.

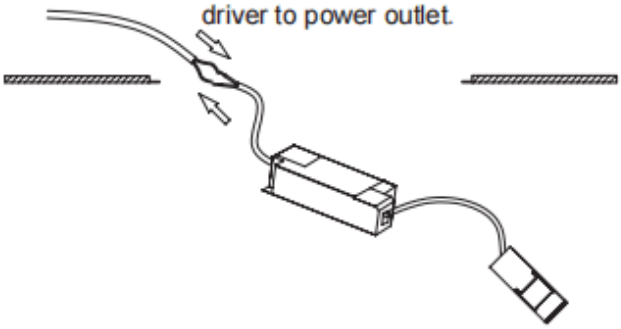

3

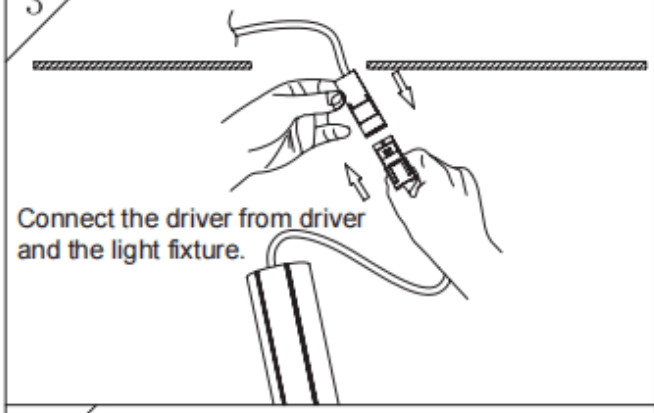

Connect the driver from driver and the light fixture.

4

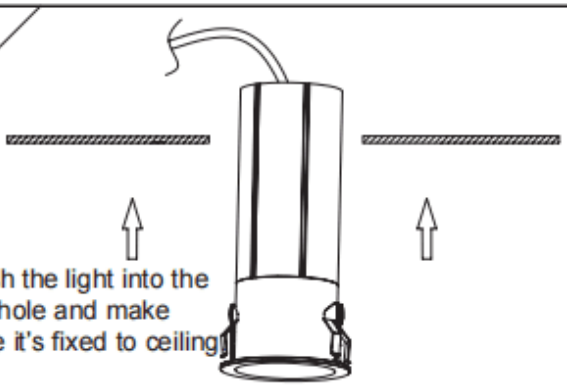

Push the light into the cut hole and make sure it's fixed to ceiling.

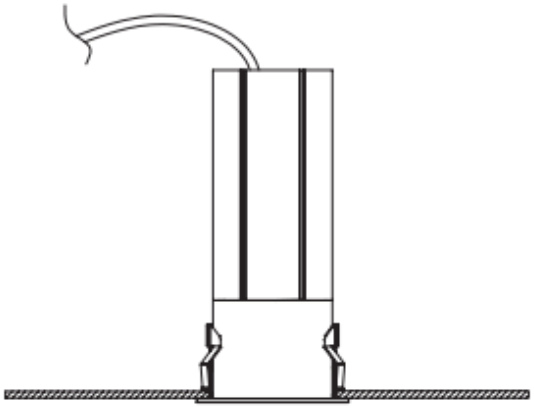

5



Installation completed.